XO5027LVxx-S Series
Fundamental Crystal Oscillator IC
Preliminary datasheet

Features

- Wide range of operating supply voltage: 0.8 to 2.0V
- Optimized low crystal drive current oscillation for miniature crystal units
- 2 pad layout options for mounting
  - ➢ XO5027LVAx-S: for Flip Chip Bonding
  - ➢ XO5027LVCx-S: for Wire Bonding
- Recommended oscillation frequency range: 20MHz to 50MHz
- Frequency divider built-in: f_O, $f_O/2$, $f_O/4$, $f_O/8$, $f_O/16$, $f_O/32$
- -40 to 125℃ operating temperature range
- Standby function
  High impedance in standby mode, oscillator stops
- CMOS output duty level ($1/2V_{DD}$)
- 50 ±5% output duty
- 15pF output drive capability

Application

- Used for crystal oscillator
- 7050, 5032, 3225, 2520, 2016 ,1612 Crystal Oscillator

Description

The XO5027LVxx-S series are miniature crystal oscillator module ICs. The devices are fabricated using a proprietary low voltage process, enabling 0.8V operation. The pad layouts are selective from 3 types depending on pack- age structures, mounting methods, which are suitable for miniature crystal oscillators. The XO5027LVxx-S series can be used to realize ultra miniature, ultra low voltage crystal oscillators.

Ordering Information

Part no.	Package type
XO5027LVxx -zWF-S	Wafer form
XO5027LVxx -zDE-S	Die form

Note:
"-z" shows the die thickness.
"DE" stands for chip form, "WF" stands for Wafer form.

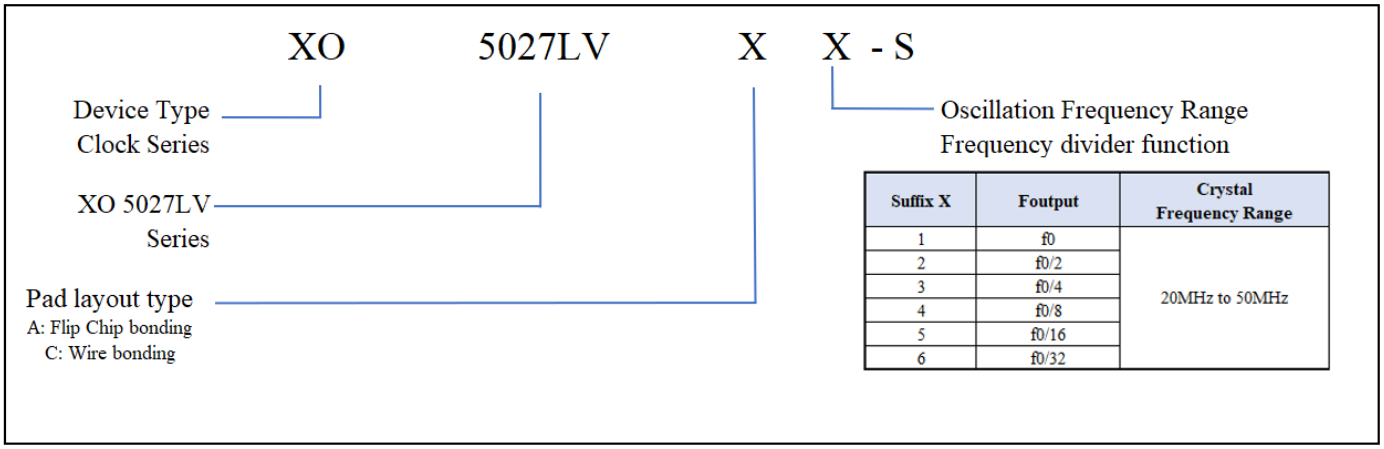

Suffix X	Foutput	Crystal Frequency Range
1	f0	20MHz to 50MHz
2	f0/2	
3	f0/4	
4	f0/8	
5	f0/16	
6	f0/32	

Series Configuration

Version*1	Operating supplyvoltage range [V]	Oscillation mode	Recommended oscillationfrequency range*2 [MHz]	Output frequency	Output drive capability [mA] (VDD = 1.2V)	Standby mode	
						Oscillator stop function	Output state
5027LVx1-S	0.8 to 2.0	Fundamental	20 to 50	f_O	±3	Yes	Hi-Z
5027LVx2-S				$f_O/2$			
5027LVx3-S				$f_O/4$			
5027LVx4-S				$f_O/8$			
5027LVx5-S				$f_O/16$			
5027LVx6-S				$f_O/32$			

Note:

*1. Chip form devices have designation 5027LVxx-S.

Block Diagram

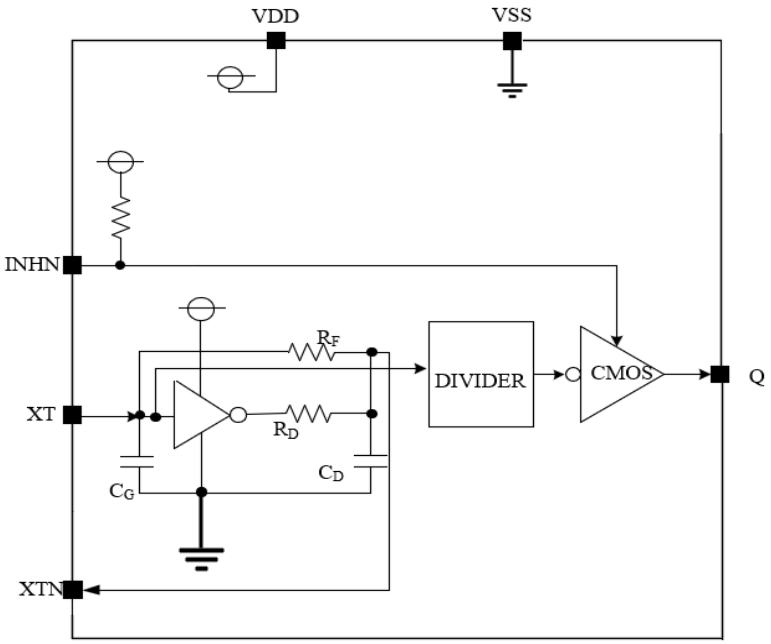

Function Description

Standby Function

When INHN goes LOW, the oscillator stops and the output on Q becomes high impedance.

INHN	Q	Oscillator
HIGH (or open)	Output frequency	Normal operation
Low	High impedance	Stopped

Power-saving Pull-up Resistor

The INHN pin pull-up resistance R_{UP1} or R_{UP2} changes in response to the input level (HIGH or LOW). When INHN is tied LOW level, the pull-up resistance is large (R_{UP1}), reducing the current consumed by the resis- tance. When INHN is left open circuit, the pull-up resistance is small (R_{UP2}), which increases the input suscep- tibility to external noise. However, the pull-up resistance ties the INHN pin HIGH level to prevent external noise from unexpectedly stopping the output.

Oscillation Detector Function

The XO5027LVxx-S series also feature an oscillation detector circuit. This circuit functions to disable the outputs until the oscillator circuit starts and oscillation becomes stable. This alleviates the danger of abnormal oscillator out- put at oscillator start-up when power is applied or when INHN is switched.

Pad Configuration

Flip Chip

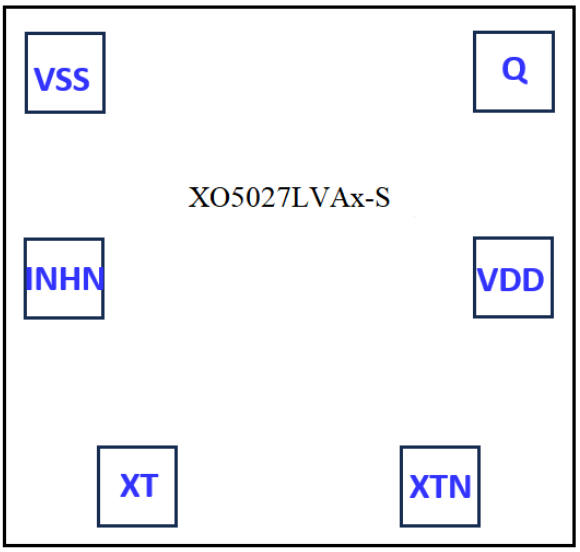

Wire Bonding

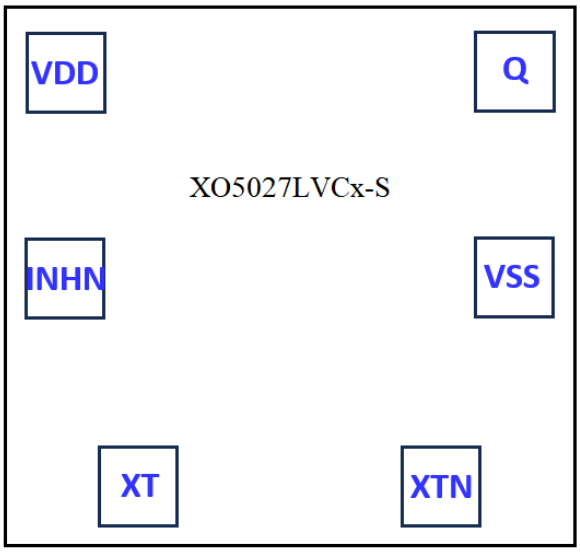

Pad Coordinate File			
X Coordinate	**Y Coordinate**	**5027LVAx-S(FC)**	**5027LVCx-S(WB)**
-135.2	-186.5	XT	XT
135.2	-186.5	XTN	XTN
201.5	-1.1	V_{DD}	V_{SS}
201.5	183.5	Q	Q
-201.5	183.5	V_{SS}	V_{DD}
-201.5	-1.1	INHN	INHN
Note: Substrate is connected to GND or floating.			
Die Size: 580μm*550μm (Including scribe line, Scribe Line Width 65um) **Die Thickness:** 130μm±15μm (-3) or 100um±15um (-4) **Pad Size:** 70μm*70μm **Substrate Level:** GND or Floating			

Pad Description

Sym.	Type	Description	
XTN	O	Amplifier output.	Crystal oscillator connected between XT and XTN
XT	I	Amplifier input.	
INHN	I	Output state control input • Oscillator stopped and device in standby mode when LOW • Pull-up resistor built-in	
VDD	-	Supply voltage	
VSS	P	Ground	
Q	O	Output frequency determined by internal circuit to one of f_O, $f_O/2$, $f_O/4$, $f_O/8$, $f_O/16$, $f_O/32$	

Maximum Ratings

Parameter	Symbol	Condition	Rating	Unit
Supply voltage range	V_{DD}	Between V_{DD} and V_{SS}	-0.5 to +4.0	V
Input voltage range	V_{IN}	Input pins	-0.5 to V_{DD} + 0.5	V
Output voltage range	V_{OUT}	Output pins	-0.5 to V_{DD} + 0.5	V
Storage temperature range	T_{STG}	Wafer form	-65 to +150	℃
Output current	I_{OUT}	Q pin	±20	mA

Recommended Operating Conditions

Parameter	Symbol	Condition	Rating			Unit
			Min	Typ.	Max	
Operating supply voltage	V_{DD}	CL <=15pF	0.8	–	2	V
Input voltage	V_{IN}	Input pins	V_{SS}	–	V_{DD}	V
Operating temperature	T_{OPR}		-40	–	125	℃
Oscillation frequency*1	f_O		20	–	50	MHz
Output frequency	f_{OUT}	CL<=15pF	0.625	–	50	MHz

Note:

*1: The oscillation frequency is a yardstick value derived from the crystal used for RSM characteristics authentication. However, the oscillation frequency range is not guaranteed. Specifically, the characteristics can vary greatly due to crystal characteristics and mounting conditions, so the oscillation characteristics of components must be carefully evaluated.

DC Electrical Characteristics

(V_{DD} = 0.8 to 2.0V, V_{SS} = 0V, Ta = -40 to +125℃ unless otherwise noted.)

Parameter	Sym.	Condition		Datasheet Min	Datasheet Typ	Datasheet Max	Unit
HIGH-level output voltage	V_{OH}	Measurement cct 3, I_{OH} = –0.7mA, V_{DD} =0.8V, Qpin		0.6	–	–	V
		Measurement cct 3, I_{OH} = –3mA, V_{DD} =1.1V, Qpin		0.8	–	–	V
		Measurement cct 3, I_{OH} = –5mA, V_{DD} =1.4V, Qpin		1	–	–	V
LOW-level output voltage	V_{OL}	Measurement cct 3, I_{OH} = 0.7mA, V_{DD} =0.8V, Qpin		–	–	0.2	V
		Measurement cct 3, I_{OH} = 3mA, V_{DD} =1.1V, Qpin		–	–	0.3	V
		Measurement cct 3, I_{OH} = 5mA, V_{DD} =1.4V, Qpin		–	–	0.4	V
HIGH-level input voltage	V_{IH}	INHN, Measurement cct 4		0.7V_{DD}	–	–	V
LOW-level input voltage	V_{IL}	INHN, Measurement cct 4		–	–	0.3V_{DD}	V
Output leakage current	I_Z	Measurement cct 5, Q pin INHN = LOW, Ta = 25 ℃	V_{OH} =V_{DD}	–	–	20	μA
			V_{OL} =V_{SS}	20	–	–	μA
Current consumption*1	I_{DD}	5027LVx1-S (f_O), Measurement cct 1, no load, INHN = open, f_O = 50MHz, f_{OUT} = 50MHz	V_{DD} = 1.8V	-	2.4	4.8	mA
			V_{DD} = 1.5V	-	1.7	3.4	mA
			V_{DD} = 1.2V	-	1.2	2.4	mA
			V_{DD} = 1.0V	-	0.8	1.6	mA
		5027LVx2-S (f_O/2), Measurement cct 1, no load, INHN = open, f_O = 50MHz, f_{OUT} = 25MHz	V_{DD} = 1.8V	-	1.8	2.7	mA
			V_{DD} = 1.5V	-	1.5	2.3	mA
			V_{DD} = 1.2V	-	1.1	1.7	mA
			V_{DD} = 1.0V	-	0.8	1.2	mA
		5027LVx3-S (f_O/4), Measurement cct 1, no load, INHN = open, f_O = 50MHz, f_{OUT} = 12.5MHz	V_{DD} = 1.8V	-	1.6	2.4	mA
			V_{DD} = 1.5V	-	1.3	2.0	mA
			V_{DD} = 1.2V	-	1.0	1.5	mA
			V_{DD} = 1.0V	-	0.6	0.9	mA
		5027LVx4-S (f_O/8), Measurement cct 1, no load, INHN = open, f_O = 50MHz, f_{OUT} = 6.25MHz	V_{DD} = 1.8V	-	1.5	2.3	mA
			V_{DD} = 1.5V	-	1.2	1.8	mA
			V_{DD} = 1.2V	-	0.9	1.4	mA
			V_{DD} = 1.0V	-	0.55	0.8	mA
		5027LVx5-S (f_O/16), Measurement cct 1, no load, INHN = open, f_O = 50MHz, f_{OUT} = 3.125MHz	V_{DD} = 1.8V	-	1.4	2.1	mA
			V_{DD} = 1.5V	-	1.1	1.7	mA
			V_{DD} = 1.2V	-	0.8	1.2	mA
			V_{DD} = 1.0V	-	0.5	0.8	mA
		5027LVx6-S (f_O/32), Measurement cct 1, no load, INHN = open, f_O = 50MHz, f_{OUT} = 1.5625MHz	V_{DD} = 1.8V	-	1.4	2.1	mA
			V_{DD} = 1.5V	-	1.1	1.7	mA
			V_{DD} = 1.2V	-	0.8	1.2	mA
			V_{DD} = 1.0V	-	0.5	0.8	mA
Standby current	I_{ST}	Measurement cct 1, INHN = LOW, Ta = 25 ℃		–	–	10	μA
INHN pull-up resistance	R_{UP1}	Measurement cct 6, V_{DD}=1.5V		0.4	1.3	10	MΩ
	R_{UP2}			30	65	150	KΩ

Note:
*1. When loading the capacitance to Q_{pin}, the charge and discharge current (I_{CL}) consumed by load capacitance ($C_{L)}$ is given by the following equation. (output frequency: f_{OUT})

$I_{CL} = C_L * V_{DD} * f_{OUT}$

AC Electrical Characteristics

(V_{DD}= 0.8 to 2.0V, V_{SS}= 0V, Ta = -40 to +125℃ unless otherwise noted.)

Parameter	Sym.	Condition		Datasheet			Unit
				Min	Typ.	Max	
Output rise time	t_{r1}	Measurement cct 1, C_L = 15pF, 0.2V_{DD} to 0.8V_{DD}	V_{DD} =1.0V	–	2.0	4.0	ns
	t_{r2}		V_{DD} =1.2V	–	1.8	3.0	ns
	t_{r3}		V_{DD} =1.8V		1.3	2.5	ns
Output fall time	t_{f1}	Measurement cct 1, C_L = 15pF, 0.8V_{DD} to 0.2V_{DD}	V_{DD} =1.0V	–	2.2	4.0	ns
	t_{f2}		V_{DD} =1.2V		1.8	3.0	ns
	t_{f3}		V_{DD} =1.8V	–	1.1	2.5	ns
Output duty cycle	Duty	Measurement cct 1, Ta = 25 ℃, C_L = 15pF		45	50	55	%
Output enable delay time	t_{OE}	Measurement cct 2, Ta = 25 ℃, C_L<=15pF		–	–	2	ms
Output disable delay time	t_{OD}	Measurement cct 2, Ta = 25 ℃, C_L<=15pF		–	–	200	ns

Output switching waveform

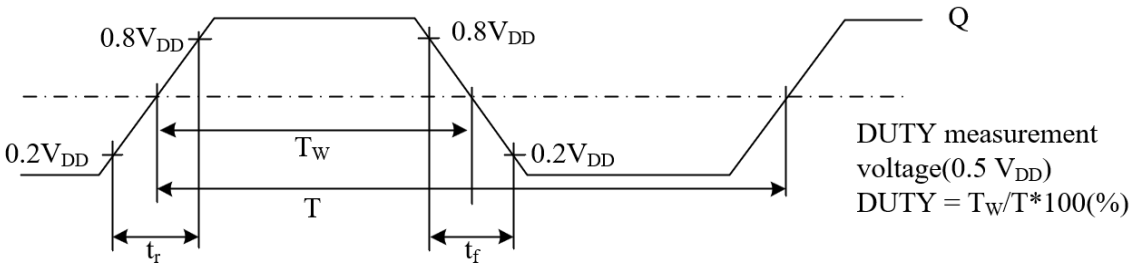

Output disable and oscillation start timing chart

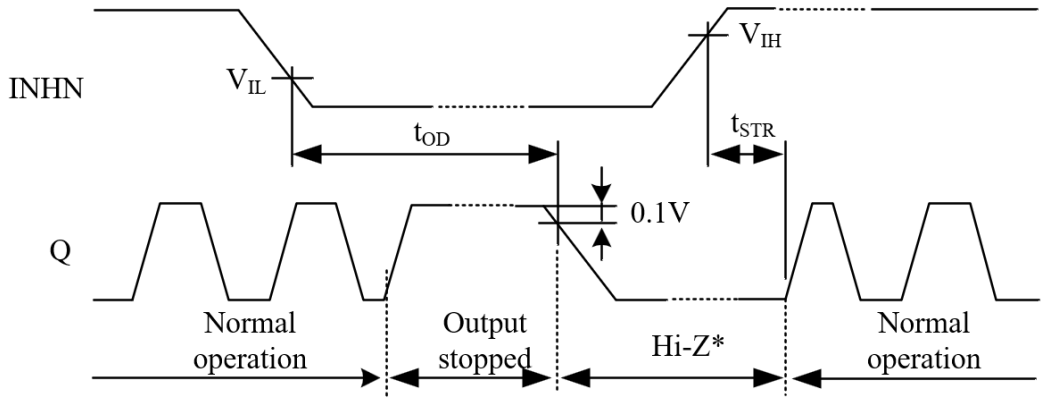

When INHN goes HIGH to LOW, the Q output goes HIGH once and then becomes high impedance.
When INHN goes LOW to HIGH, the Q output goes from high impedance to normal output operation when the oscillation starts (oscillation is detected).
*) The high-impedance interval in the figure is shown as a LOW level due to the 1kohm pull-down resistor connected to the Qpin (see "Measurement circuit 2" in the "Measurement Circuits" section).

Measurement Circuit

Measurement circuit 1 Parameters: I_{DD}, I_{ST}, DUTY, t_r, t_f

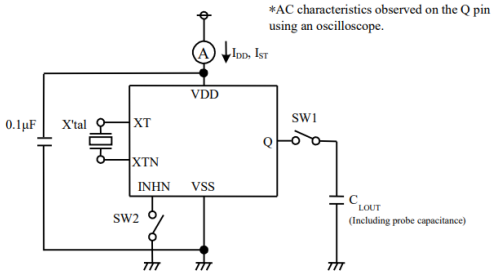

Parameter	SW1	SW2
I_{DD}	OFF	OFF
I_{ST}	ON or OFF	ON
DUTY,t_r,t_f	ON	OFF

Measurement circuit 2 Parameter: t_{OD}

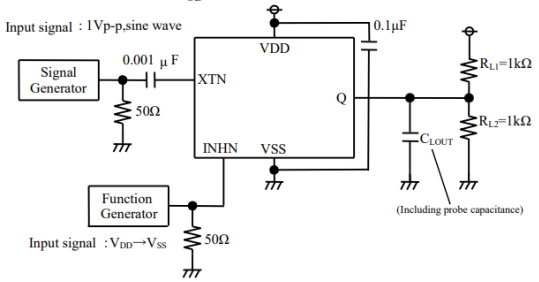

Measurement circuit 3 Parameter: V_{OH}, V_{OL}

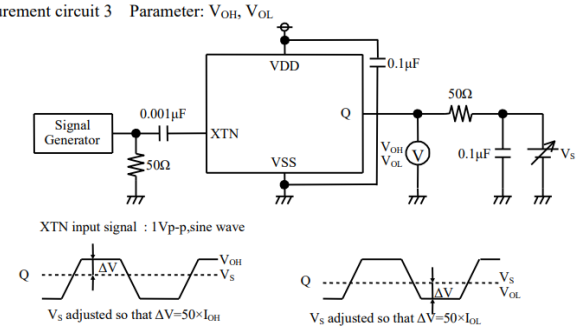

Measurement circuit 4 Parameter: V_{IH}, V_{IL}

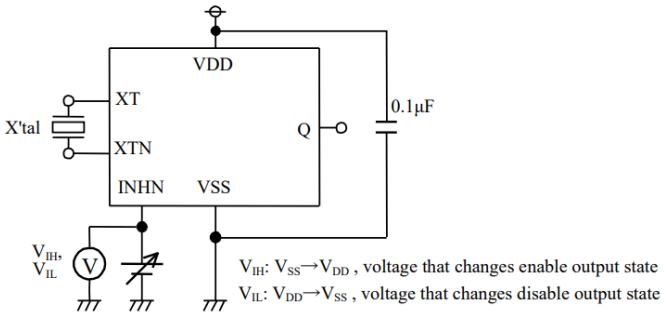

Measurement circuit 5 Parameter: I_Z

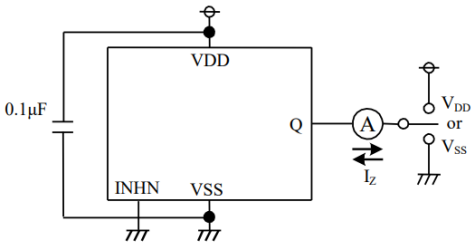

Measurement circuit 6 Parameter: R_{PU1}, R_{PU2}

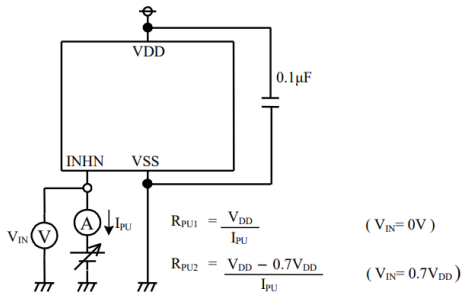

Current Consumption test figures:

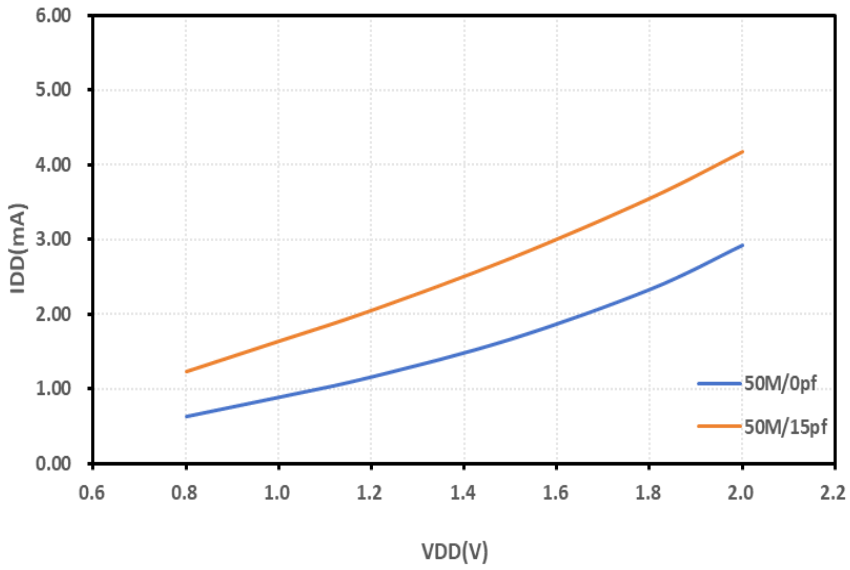

Waveform test figures:

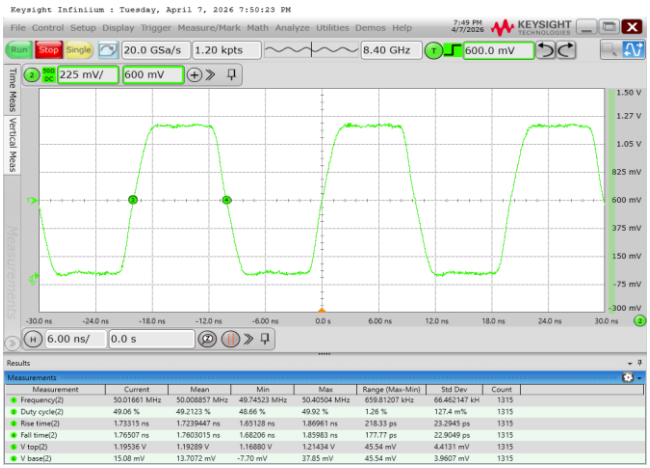

XO5027LVC1-S,f_{OUT}=50MHz,V_{DD}=1.2V,Ta=25℃

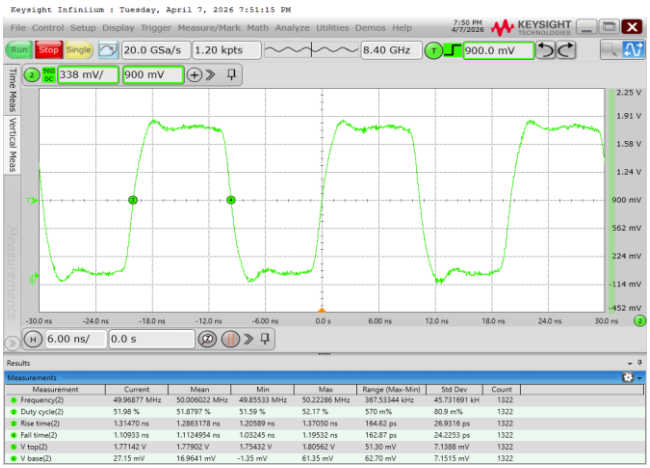

XO5027LVC1-S,f_{OUT}=50MHz,V_{DD}=1.8V,Ta=25℃

Phase noise test figures:

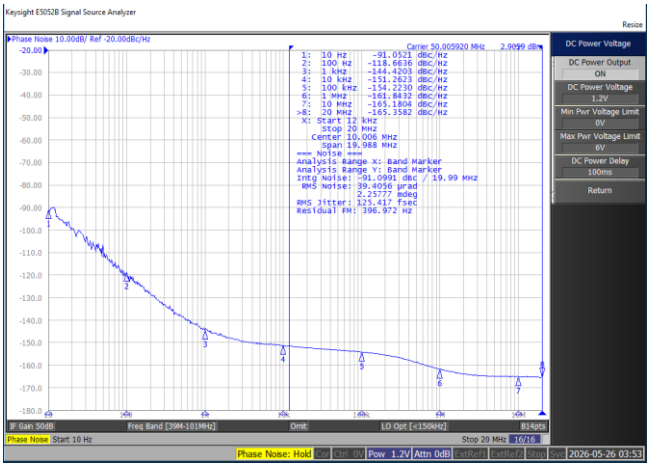

XO5027LVC1-S,f_{OUT}=50MHz,V_{DD}=1.2V,Ta=25℃

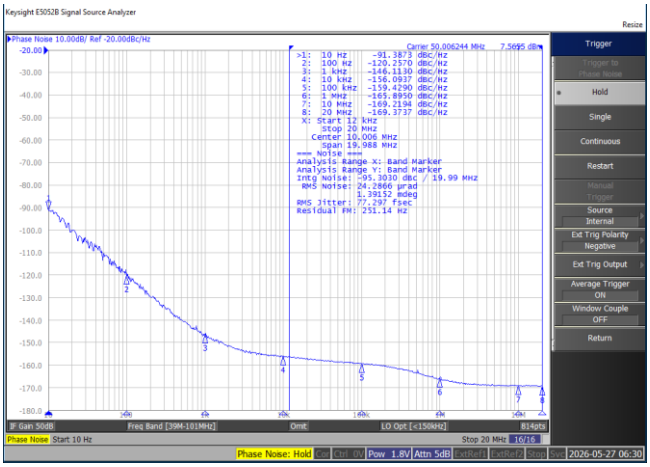

XO5027LVC1-S,f_{OUT}=50MHz,V_{DD}=1.8V,Ta=25℃

Negative resistance test figures:

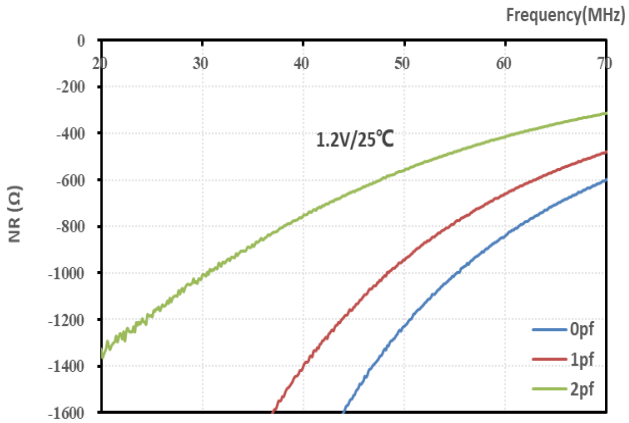

XO5027LVC1-S,f_{OUT}=50MHz,V_{DD}=1.2V,Ta=25℃

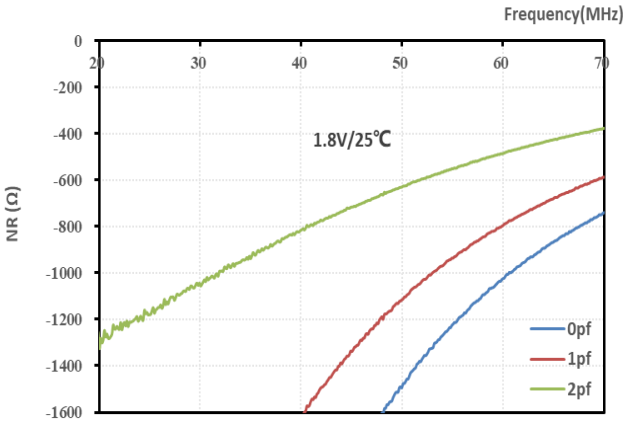

XO5027LVC1-S,f_{OUT}=50MHz,V_{DD}=1.8V,Ta=25℃

Revision History

Revision	Description	Date
V1.0	Official release	2026/9/20